SQP Series Vane Pumps

—Lower Noise Intravane pumps For Industrial Application

PIONEER FLURD POWER

SQP Series Single Pumps

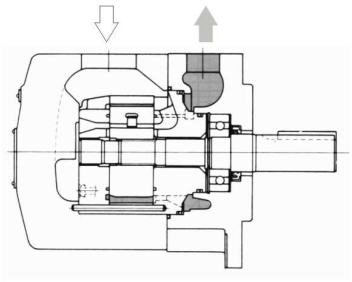

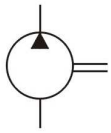

Model Code

(F3-)	SQP2	-21	-86	C	(F)	-(LH)	-18
Prefix,fluid compatibility	Frame size	▲Code	Shafts	Outlet positions	Mounting	Rotation	Design
Omit-NBR seals F3-FKM seals	SQP1	2,3,4,5,6,7,8,9, 10,11,12,14	1:Str.Key 86:Str.Key	(Viewed from cover end of pump) A-Opposite inlet port B-90° CCW from inlet C-Inline with inlet D-90° CW from inlet	Omit-Flange mounting L-Foot mounting	(Viewed from shaft end of pump) Omit- Right hand for clockwise LH - Left hand for counter clockwise	15
	SQP2	10,12,14,15,17, 19,21					18
	SQP3	21,25,30,32,35, 38,45					
	SQP4	42,45,50,57,60, 66,75					

▲ Rated capacity in Us gpm at 1200r/min and 0.69 MPa.

Sound.Data

[Conditions：ISO VG32.(50℃) inlet distance=1m]

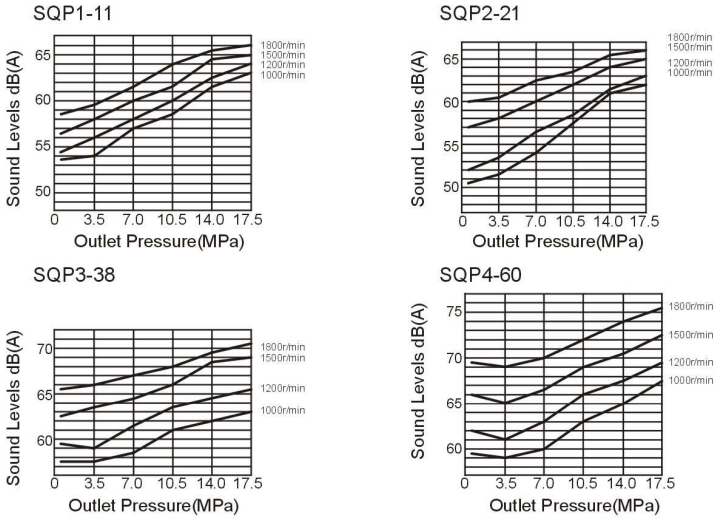

Mainly Specification

Typical flows at 50℃，10W oil at 20cSt,0 MPa inlet at specified speeds.

Frame size	Code	Geometric Displacement mL/r	Max.pressure MPa	Max.Speed r/min	Min.Speed r/min
SQP1	2	7.5	13.8	1800	600
	3	10.2			
	4	12.8	17.2		
	5	16.7			
	6	19.2			
	7	22.9			
	8	26.2			
	9	28.8			
	10	31.0			
	11	35.0			
	12	37.9	15.7		
	14	44.2	13.8		
SQP2	10	32.5	17.2	1800	600
	12	38.3			
	14	43.3			
	15	46.7			
	17	52.5			
	19	59.2			
	21	65.0			
SQP3	21	66.7	17.2	1800	600
	25	79.2			
	30	95.0			
	32	100			
	35	109			
	38	118			
	45	156			
SQP4	42	134	17.2	1800	600
	45	140			
	50	156			
	57	178			
	60	189			
	66	207			
	75	237			

● Rated capacity in US gpm at 1200 r/min and 0.69MPa(100psi).

▲A transient (peak) pressure10% over the max.continuous pressure rating for 0.5 seconds or less duration is allowed

Typical flows at 50℃，10W oil at 20cSt,0 MPa inlet at specified speeds.

Frame size	Speed r/min	Output flow L/min				Input power kw			
		0.69MPa	6.9MPa	13.8MPa	17.2MPa	0.69MPa	6.9MPa	13.8MPa	17.2MPa
SQP1-2	1000	7.5	6.0	4.5		0.2	1.2	2.1	
	1200	9.5	8.5	6.5		0.3	1.5	2.5	
	1500	11.2	9.3	7.5		0.3	1.8	3.2	
	1800	13.5	11.2	9.0		0.4	2.2	3.8	
SQP1-3	1000	10.2	8.8	7.4		0.3	1.5	3.1	
	1200	12.5	11.0	9.5		0.4	1.8	3.7	
	1500	15.3	13.7	12.1		0.5	2.3	4.7	
	1800	18.4	16.9	15.3		0.5	2.7	5.6	
SQP1-4	1000	12.8	12.3	10.8	10.0	0.4	1.8	3.7	4.6
	1200	16.0	15.0	13.5	13.0	0.5	2.2	4.4	5.5
	1500	19.2	17.7	16.2	15.7	0.6	2.7	5.6	6.9
	1800	23.1	21.3	19.5	19.0	0.7	3.2	6.7	8.3
SQP1-5	1000	16.7	15.7	14.7	14.2	0.4	2.8	4.8	6.0
	1200	20.0	19.0	18.0	17.5	0.5	3.2	5.8	7.2
	1500	25.0	24.0	23.0	22.5	0.6	3.9	7.3	9.0
	1800	30.0	29.0	28.0	27.5	0.6	4.2	8.6	10.7
SQP1-6	1000	19.2	18.2	17.0	16.2	0.4	3.0	5.5	6.6
	1200	23.0	22.0	20.5	20.0	0.5	3.5	6.5	7.9
	1500	28.5	27.5	26.0	25.0	0.6	4.3	8.1	9.8
	1800	34.5	33.5	32.0	31.0	0.7	5.2	9.7	11.8
SQP1-7	1000	22.9	21.4	19.9	18.9	0.5	3.4	6.2	7.6
	1200	27.5	26.0	24.5	23.5	0.6	4.0	7.4	9.1
	1500	34.4	32.9	31.4	30.4	0.7	5.0	9.2	11.3
	1800	41.3	39.8	38.3	37.3	0.8	5.9	11.0	13.6
SQP1-8	1000	26.2	24.2	22.7	21.2	0.5	3.9	6.7	8.3
	1200	31.5	29.5	28.0	26.5	0.6	4.5	8.0	10.0
	1500	39.4	37.4	35.9	34.4	0.8	5.5	10.0	12.5
	1800	47.2	45.2	43.7	42.2	0.8	6.6	11.8	14.8
SQP1-9	1000	28.8	26.8	25.3	23.8	0.5	4.2	7.0	8.6
	1200	34.5	32.5	31.5	30.0	0.6	5.0	8.5	10.5
	1500	43.2	41.2	39.7	38.2	0.8	5.9	10.4	12.9
	1800	51.8	49.8	48.3	46.8	0.9	7.1	12.3	15.3
SQP1-10	1000	31	29	26.5	25.5	0.6	4.8	9.1	11.3
	1200	37.2	35.2	32.7	31.7	0.8	5.7	11.0	13.7
	1500	46.5	44.5	42.0	41.0	0.9	6.8	13.7	17
	1800	55.8	53.6	51.1	50.1	1.0	8.3	16.2	20.3
SQP1-11	1000	35.0	33.0	30.5	29.5	0.7	4.9	9.2	11.4
	1200	42.0	40.0	37.5	36.5	0.8	5.7	11.0	13.7
	1500	52.5	50.5	48.0	47.0	1.0	6.9	13.8	17.1
	1800	63.2	61.0	58.5	57.5	1.0	8.3	16.2	20.3
SQP1-12	1000	37.9	36.4	34.4		0.7	5.6	10.4	
	1200	45.5	44.0	42.0		0.9	6.5	12.5	
	1500	56.9	55.4	53.4		1.1	7.9	15.6	
	1800	68.2	66.7	64.7		1.1	9.4	18.4	
SQP1-14	1000	44.2	42.7	40.7		1.0	6.6	12.2	
	1200	53.0	51.5	49.5		1.1	7.8	14.6	
	1500	66.0	64.0	62.0		1.3	9.6	18.2	
	1800	79.5	77.5	75.5		1.4	11.5	21.7	
SQP2-10	1000	32.5	29.5	26.0	24.5	0.9	4.9	9.3	11.3
	1200	39.0	36.0	32.5	31.0	1.0	5.8	11.1	13.5
	1500	48.8	45.8	42.3	40.8	1.2	7.2	13.8	16.8
	1800	58.5	55.5	52.0	50.5	1.3	8.5	16.5	20.1
SQP2-12	1000	38.3	35.9	33.3	31.8	1.0	5.7	10.9	13.4
	1200	46.0	43.6	41.0	39.5	1.1	6.5	13.0	16.0
	1500	57.5	55.1	52.5	51.0	1.3	8.3	16.1	19.9
	1800	69.0	66.6	64.0	62.5	1.4	9.8	19.3	23.8
SQP2-14	1000	43.3	40.2	36.8	35.8	1.2	6.4	12.2	15.1
	1200	52.0	48.5	45.5	44.5	1.3	7.5	14.5	18.0
	1500	65.0	61.9	58.5	57.5	1.5	9.4	18.0	22.4
	1800	78.0	74.9	71.5	70.5	1.7	11.1	21.5	26.7
SQP2-15	1000	46.7	43.7	40.7	39.2	1.2	6.8	13.0	15.9
	1200	56.0	53.0	50.0	48.5	1.3	8.0	15.5	19.0
	1500	70.0	67.0	64.0	62.5	1.5	9.9	19.3	23.6
	1800	84.0	81.0	78.0	76.5	1.7	11.8	23.0	28.3

Mainly Specification

Typical flows at 50℃，10W oil at 20cSt,0 MPa inlet at specified speeds.

Frame size	Speed r/min	Output flow L/min				Input power kw			
		0.69MPa	6.9MPa	13.8MPa	17.2MPa	0.69MPa	6.9MPa	13.8MPa	17.2MPa
SQP2-17	1000	52.5	49.7	46.5	44.5	1.4	7.4	14.3	17.6
	1200	63.0	60.6	57.0	55.0	1.5	9.0	17.0	21.0
	1500	78.8	76.0	72.8	70.8	1.7	10.8	21.1	26.1
	1800	94.5	91.7	88.5	86.5	1.9	12.9	25.1	31.2
SQP2-19	1000	59.2	56.2	53.2	50.2	1.5	8.5	16.0	20.1
	1200	71.0	68.0	65.0	62.0	1.7	10.0	19.0	24.0
	1500	88.7	85.7	82.7	79.7	1.9	12.3	24.1	29.8
	1800	106.5	103.7	100.7	97.7	2.2	14.7	28.2	35.7
SQP2-21	1000	65.0	62.2	59.0	57.0	1.6	9.2	17.6	21.8
	1200	78.0	75.0	72.0	70.0	1.8	11.0	21.0	26.0
	1500	97.5	94.7	91.5	89.5	2.1	13.4	26.1	32.3
	1800	117	114	111	109	2.3	16.0	31.1	38.6
SQP3-21	1000	66.7	60.7	54.7	51.7	1.6	8.9	16.8	20.6
	1200	80.0	74.0	68.0	65.0	1.8	10.5	20.0	24.5
	1500	100	94.0	88.0	85.0	2.0	12.9	24.8	30.4
	1800	120	114	108.0	105.0	2.3	15.4	30.5	36.4
SQP3-25	1000	79.2	73.5	67.2	64.2	1.8	10.7	20.5	25.1
	1200	95.0	89.0	83.0	80.0	2.0	12.5	24.5	30.0
	1500	119	113	107.0	104.0	2.3	15.7	30.4	37.3
	1800	142	136	130.0	127.0	2.6	18.7	36.4	44.6
SQP3-30	1000	95.0	88.4	81.0	78.0	1.8	12.6	24.7	30.5
	1200	114	107	100	97.0	2.0	15.0	29.5	36.5
	1500	142	136	128	125	2.4	18.6	36.7	45.5
	1800	171	164	157	154	2.7	22.2	44.0	54.5
SQP3-32	1000	100	92.0	85.0	82.0	2.1	13.5	26.0	32.2
	1200	120	112	105	102	2.3	16.0	31.0	38.5
	1500	150	142	135	132	2.7	19.8	38.6	47.9
	1800	180	172	165	162	3.1	23.6	46.1	57.4
SQP3-35	1000	109	103	95.2	92.2	2.2	14.2	27.6	34.3
	1200	131	124	117	114	2.5	17.0	33.0	41.0
	1500	164	157	150	147	2.9	20.9	41.0	51.0
	1800	196	189	182	179	3.3	24.9	50.4	61.1
SQP3-38	1000	118	111	102	99.3	2.7	15.5	29.8	36.9
	1200	142	134	126	123	3.0	18.5	35.5	44.0
	1500	177	170	161	158	3.4	22.7	44.0	54.7
	1800	213	205	197	194	3.9	27.0	52.6	65.4
SQP3-45	1000	140	131	121	116	2.9	17.9	35.4	43.7
	1200	168	159	149	144	3.2	21.2	42.2	52.2
	1500	210	201	190	185	3.7	26.2	53.5	64.9
	1800	252	243	233	228	4.2	31.2	62.7	77.7
SQP4-42	1000	134	125	115	110	2.7	17.7	35.2	43.5
	1200	161	152	142	137	3.0	21.0	42.0	52.0
	1500	201	192	182	177	3.5	26.0	52.3	64.7
	1800	241	232	222	217	4.0	31.0	62.5	77.5
SQP4-45	1000	140	131	121	116	2.9	17.9	35.4	43.7
	1200	168	159	149	144	3.2	21.2	42.2	52.2
	1500	210	201	190	185	3.7	26.2	53.5	64.9
	1800	252	243	233	228	4.2	31.2	62.7	77.7
SQP4-50	1000	156	147	137	132	3.1	20.2	39.4	49.3
	1200	187	178	168	163	3.5	24.0	47.0	59.0
	1500	234	225	215	210	4.0	29.7	58.5	73.4
	1800	280	271	261	256	4.7	35.4	69.9	87.9
SQP4-57	1000	178	168	157	151	3.8	22.9	45.1	53.7
	1200	213	203	192	186	4.3	27.3	55.2	65.8
	1500	269	259	248	242	5.0	3.6	66.3	82.5
	1800	320	10	299	292	5.7	39.3	75.5	97.3
SQP4-60	1000	189	178	166	160	4.0	24.4	46.9	58.6
	1200	227	216	204	198	4.5	29.0	56.0	70.0
	1500	284	273	261	255	5.2	35.8	69.6	87.1
	1800	340	329	317	311	5.9	42.7	83.2	104
SQP4-66	1000	207	195	182	174	4.4	26.7	51.4	62.9
	1200	248	236	223	215	4.9	31.6	61.2	76.0
	1500	310	298	285	277	5.6	39.0	76.0	94.6
	1800	372	60	347	339	6.4	46.7	91.0	113.3
SQP4-75	1000	237	223	208	200	5.0	30.5	58.7	73.2
	1200	284	269	255	247	5.6	36.1	70.0	87.3
	1500	355	340	326	318	6.5	44.5	86.9	108.0
	1800	426	411	397	389	7.3	53.5	104.1	130.0

Typical flows at 50℃, 10W oil at 20cSt,0 MPa inlet at specified speeds.

SQP1 Flange Mounting

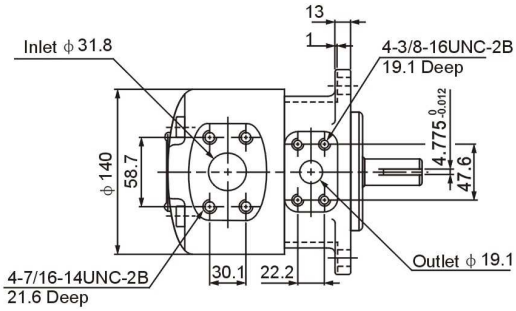

SQP1 Foot Mounting

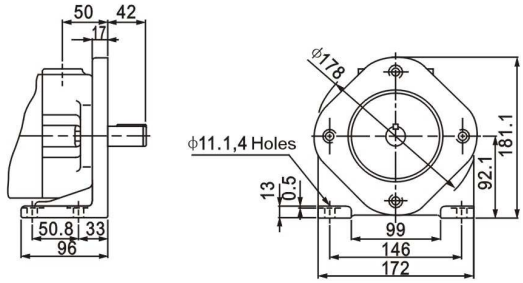

For other dimensions,refer to "Flange Mounting" type

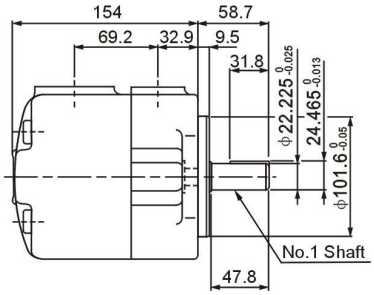

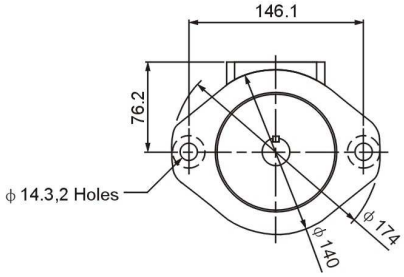

For other shaft dimensions,refer to page 49

SQP2 Flange Mounting

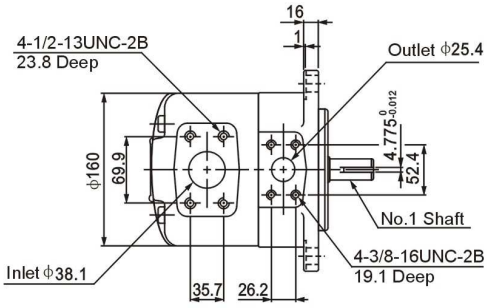

SQP2 Foot Mounting

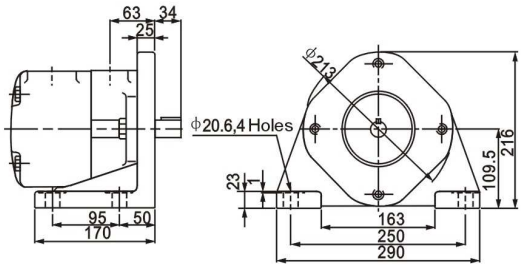

For other dimensions,refer to "Flange Mounting" type

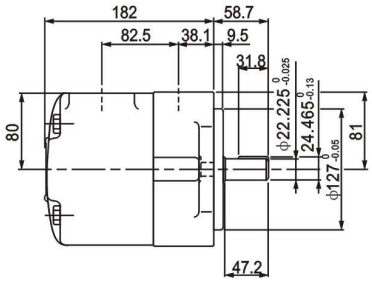

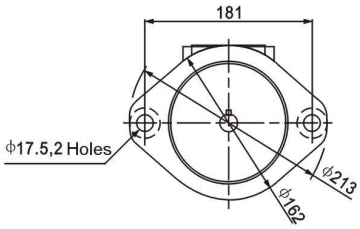

For other shaft dimensions,refer to page 49

SQP3 Flange Mounting

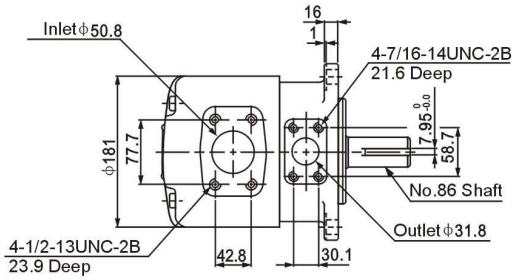

SQP3 Foot Mounting

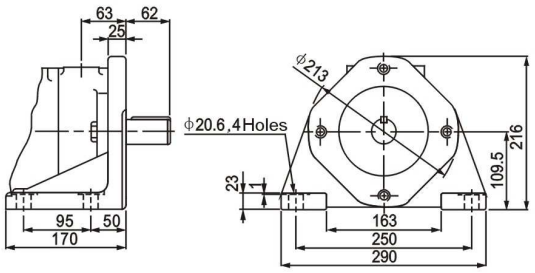

For other dimensions,refer to "Flange Mounting" type

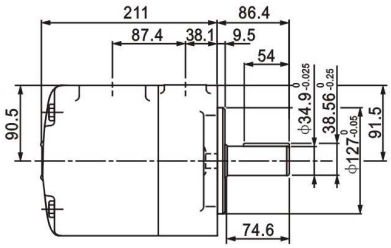

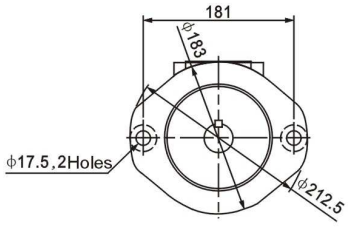

For other shaft dimensions,refer to page 49

SQP4 Flange Mounting

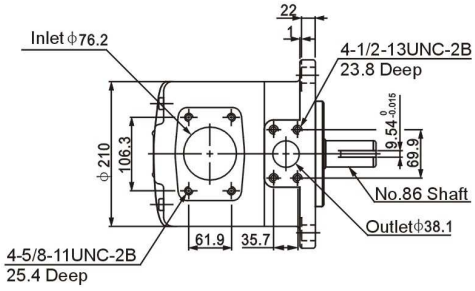

SQP4 Foot Mounting

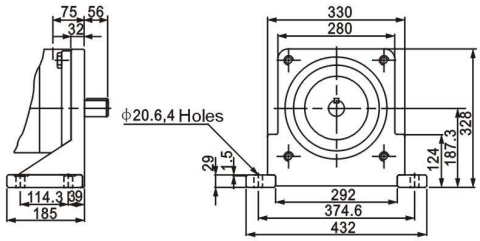

For other dimensions,refer to "Flange Mounting" type

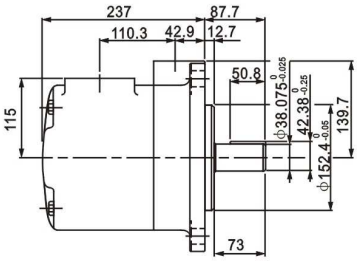

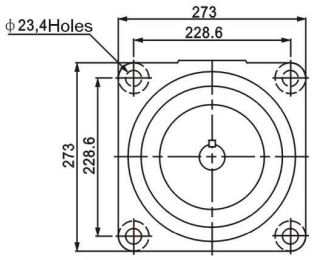

For other shaft dimensions,refer to page 49

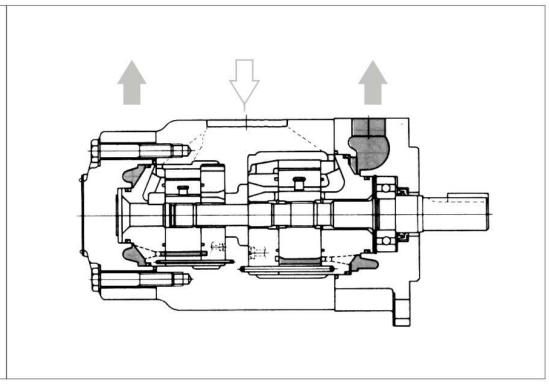

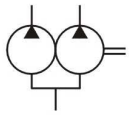

Model Code

(F3-)	SQP32	-35	-17	-86	CD	(F)	-(LH)	-18
Prefix.fluid compatibility	Frame size	▲ Code Shaft End Pump	▲ Code Cover End Pump	Shafts	Port connection	Mounting form	Rotation	Design
Omit-NBR seals F3-FKM seals	SQP21	10,12,14,15,17, 19,21	2,3,4,5,6,7,8,9, 10,11,12,14	1-Str.Key 86-Str.Key	See below	Omit-Flange mounting F-Foot mounting	(Viewed from shaft end of pump Omit- Right hand for clockiwise LH- Left hand for counter clockwise	18
	SQP31	21,25,30,32,35, 38,45	2,3,4,5,6,7,8,9, 10,11,12,14					
	SQP32	21,25,30,32,35, 38,45	10,12,14,15,17, 19,21					
	SQP41	42,45,50,57,60, 66,75	2,3,4,5,6,7,8,9, 10,11,12,14					
	SQP42	42,45,50,57,60, 66,75	10,12,14,15,17, 19,21					
	SQP43	42,45,50,57,60, 66,75	21,25,30,32, 35,38,45					

▲Rated capacity in US gpm at 1200r/min and 0.69 MPa

Port Orientation Table (Viewed from cover end of pump)

Port Orientation		All series (except SQP43)	Series SQP43
With No.1 outlet Opposite inlet:	AA	No,2 outlet 135° CCW from inlet	No.2 outlet opposite inlet
	AB	No,2 outlet 45° CCW from inlet	No.2 outlet 90° CCW from inlet
	AC	No,2 outlet 45° CW from inlet	No.2 outlet in line with inlet
	AD	No,2 outlet 135° CW from inlet	No.2 outlet 90° CW from inlet
With No.1outlet 90° CCW from inlet:	BA	No,2 outlet 135° CCW from inlet	No.2 outlet opposite inlet
	BB	No,2 outlet 45° CCW from inlet	No.2 outlet 90° CCW from inlet
	BC	No,2 outlet 45° CW from inlet	No.2 outlet in line with inlet
	BD	No,2 outlet 135° CW from inlet	No.2 outlet 90° CW from inlet
With No.1 outlet inline with inlet:	CA	No,2 outlet 135° CCW from inlet	No.2 outlet opposite inlet
	CB	No,2 outlet 45° CCW from inlet	No.2 outlet 90° CCW from inlet
	CC	No,2 outlet 45° CW from inlet	No.2 outlet in line with inlet
	CD	No,2 outlet 135° CW from inlet	No.2 outlet 90° CW from inlet
With No.1 outlet 90° CW inlet:	DA	No,2 outlet 135° CCW from inlet	No.2 outlet opposite inlet
	DB	No,2 outlet 45° CCW from inlet	No.2 outlet 90° CCW from inlet
	DC	No,2 outlet 45° CW from inlet	No.2 outlet in line with inlet
	DD	No,2 outlet 135° CW from inlet	No.2 outlet 90° CW from inlet

Port Connection

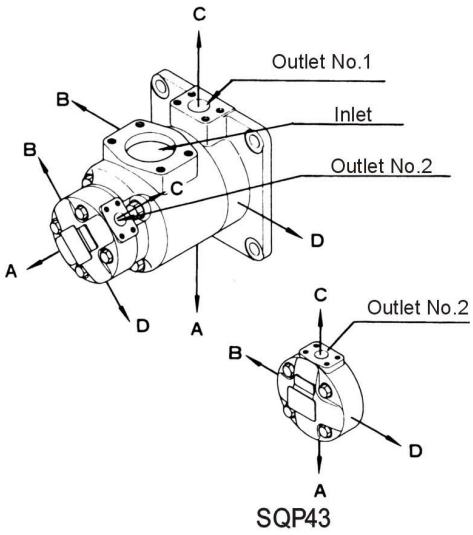

Mainly Specification

Frame size	Shaft end pump(No.1 outlet)			Cover end pump(No.2 outlet)			Max speed r/min	Min. Speed r/min
	▲Code	Geometric Displacement mL/r	Max.pressure MPa	▲Code	Geometric Displacement mL/r	Max.pressure MPa		
SQP21	10	32.5	17.2	2	7.5	13.8	1800	600
	12	38.3						
	14	43.3		3	10.2			
	15	46.7						
	17	52.5		4	12.8	17.2		
	19	59.2		5	16.7	20.7		
	21	65.0						
SQP31	21	66.7	17.2	6	19.2			
	25	79.2						
	30	95.0		7	22.9			
	32	100						
	35	109		8	26.2			
	38	118		9	28.8			
	45	140						
SQP41	42	134	17.2	10	31.0			
	45	140						
	50	156		11	35.0			
	57	178						
	60	189		12	37.9	15.7		
	66	207		14	44.2	13.8		
	75	237						
SQP32	21	66.7	17.2	10	32.5	17.2	1800	600
	25	79.2						
	30	95.0		12	38.3			
	32	100						
	35	109		14	43.3			
	38	118						
	45	140		15	46.7			
SQP42	42	134	17.2					
	45	140		17	52.5			
	50	156						
	57	178		19	59.2			
	60	189						
	66	207		21	65.0			
	75	237						
SQP43	42	134	17.2	21	66.7	17.2	1800	600
	45	140		25	79.2			
	50	156		30	95.0			
	57	178		32	100			
	60	189		35	109			
	66	207		38	118			
	75	237		45	140			

● Rated capacity in US gpm at 1200 r/min and 0.69 MPa (100psi).

▲ A transient (peak) pressure 10% over the max.continuous pressure rating for 0.5 seconds or less duration is allowed

Specification

Typical flows at 50℃，10W oil at 20cSt,0 MPa inlet at specified speeds.

Frame Size	Performance Characteristics		Weight kg
	Shart end pump(No.1 outlet)	Cover end pump(No.2 outlet)	
SQP21	Data same as SQP2 Series	Data same as SQP1 Series	31.5
SQP31	Data same as SQP3 Series		46
SQP32	Data same as SQP3 Series	Data same as SQP2 Series	48
SQP41	Data same as SQP4 Series	Data same as SQP1 Series	74
SQP42		Data same as SQP2 Series	80
SQP43		Data same as SQP3 Series	88.5

Sound Data

[Conditions:ISO VG32（50℃),0MPa inlet,distance:1m]

SQP21-17-8

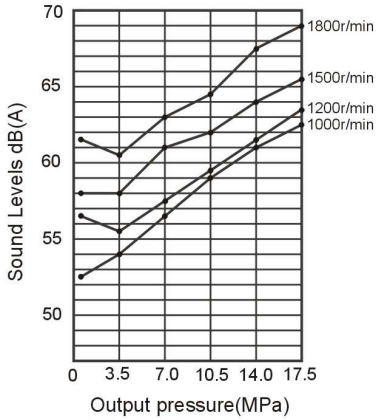

SQP43-50-35

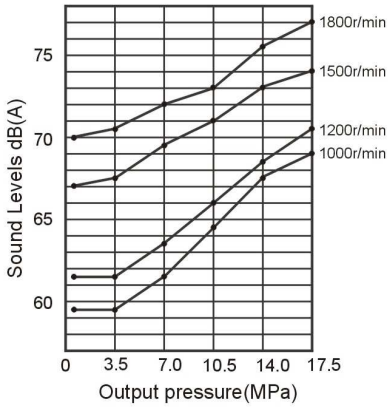

SQP32-35-17

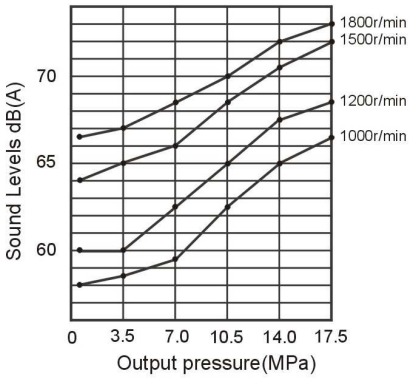

SQP21 Flange Mounting

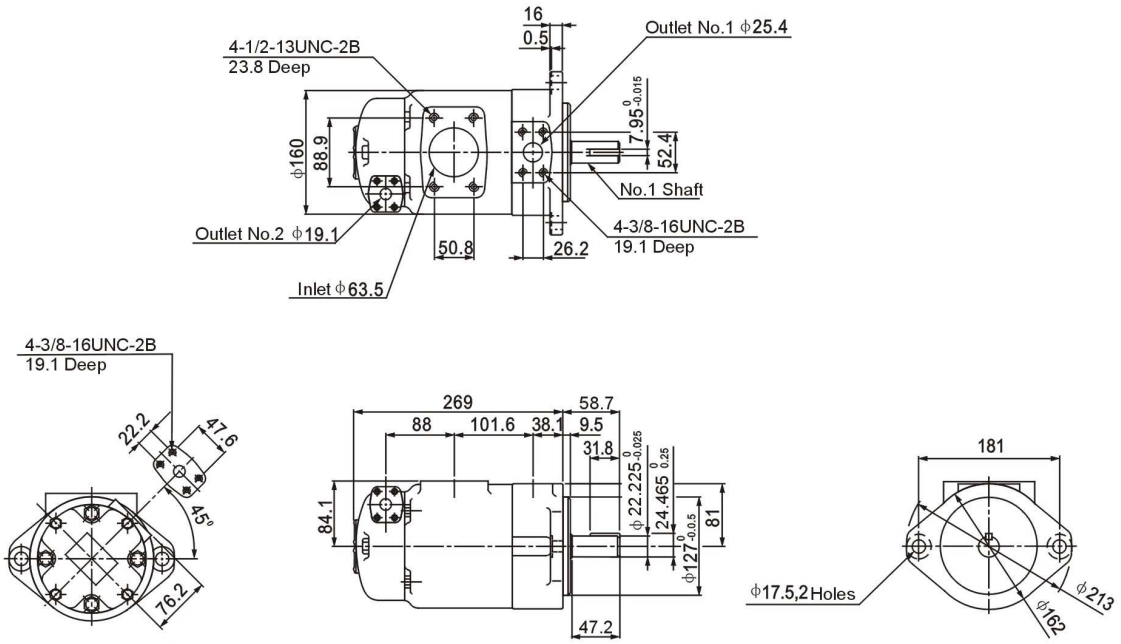

For other shaft dimensions,refer to page 49

SQP31 Flange Mounting

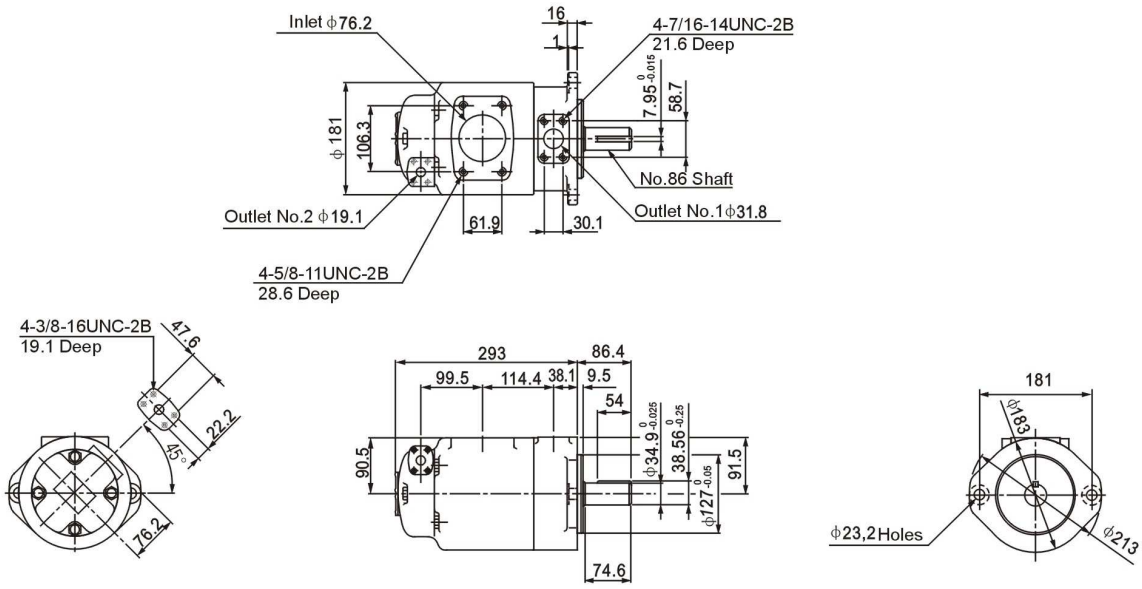

For other shaft dimensions,refer to page 49

SQP32 Flange Mounting

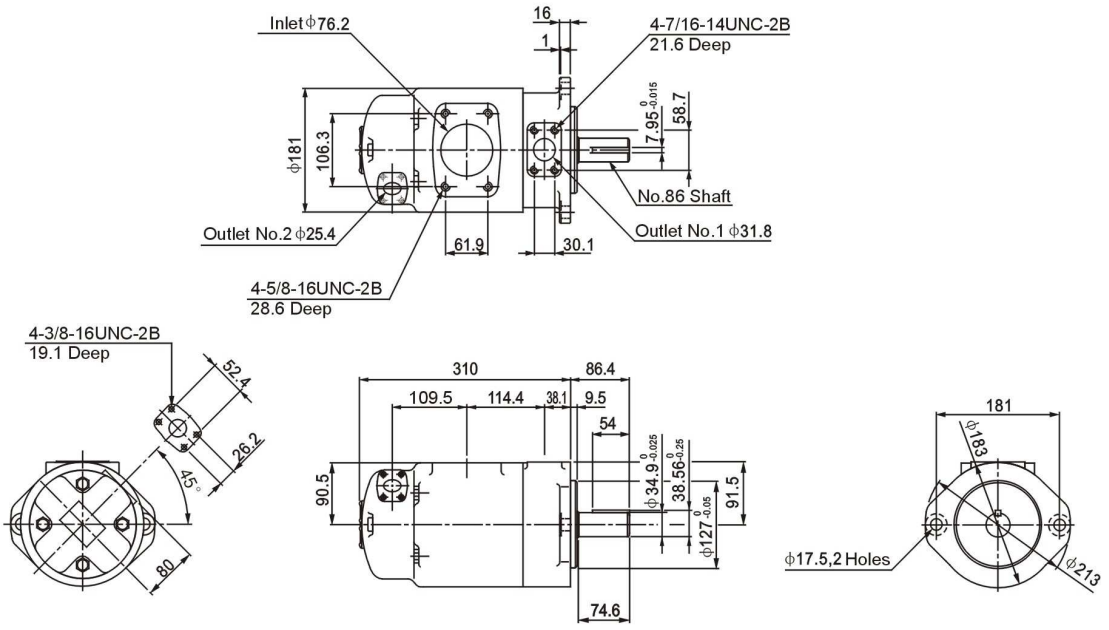

For other shaft dimensions,refer to page 49

SQP41 Flange Mounting

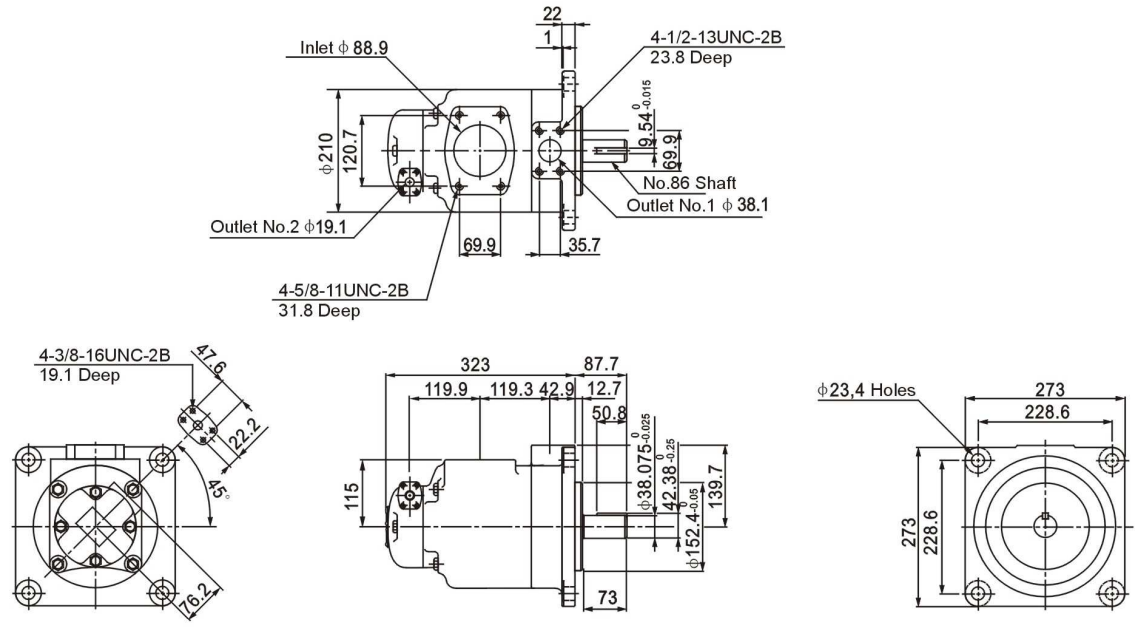

For other shaft dimensions,refer to page 49

SQP42 Flange Mounting

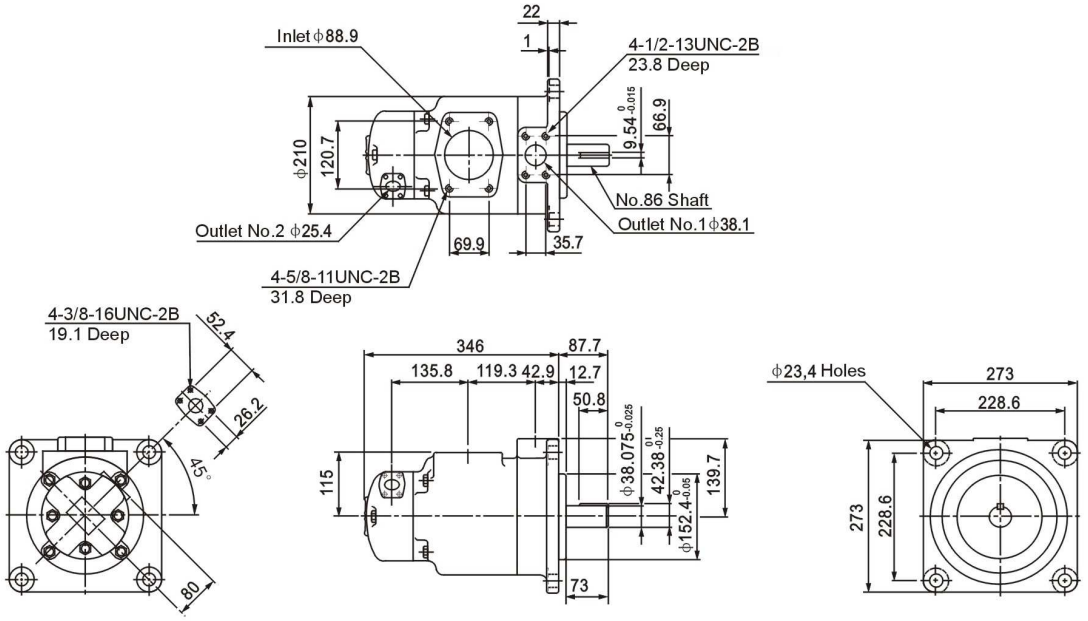

For other shaft dimensions,refer to page 49

SQP43 Flange Mounting

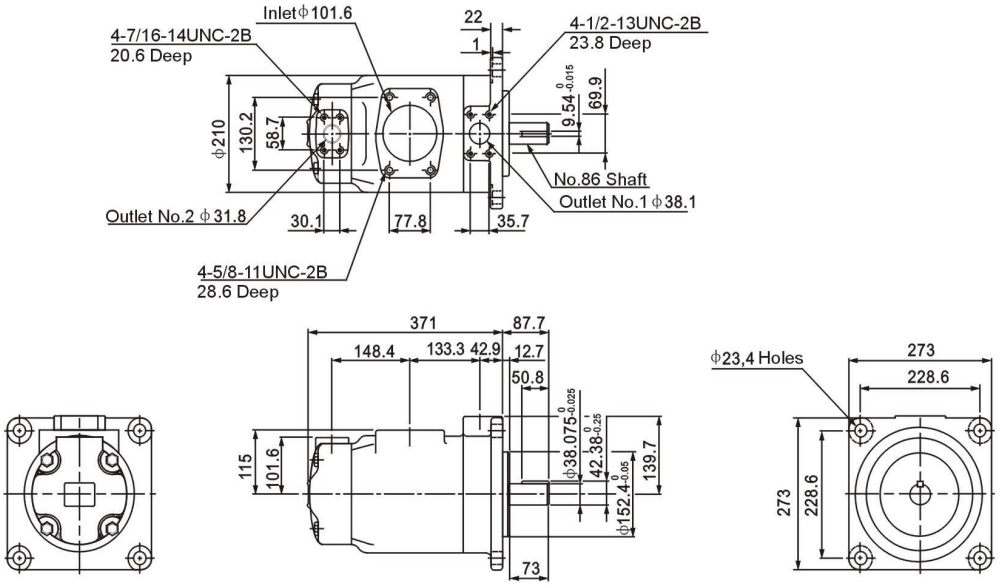

For other shaft dimensions,refer to page 49

Straight Key Shafts

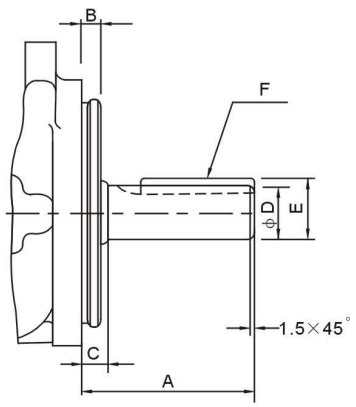

Splined Shafts

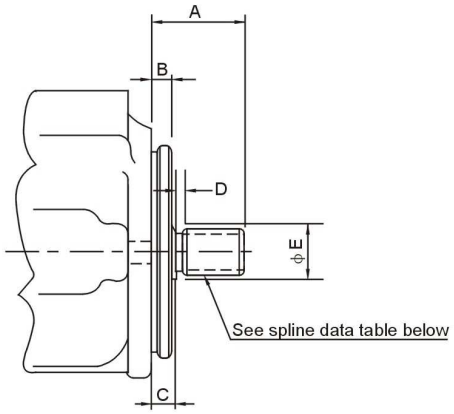

Straight Key Shafts

Model			Shaft Code	A	B	C	D	E	F Key width ×Length
V	VQ	SQP							
20V	20VQ	SQP1	1	59	9.53	12.1	22.23/22.20	24.5/24.4	4.76×32
25V	25VQ	SQP2	1	59	9.53	11.1	22.23/22.20	24.5/24.4	4.76×32
2520V	2520VQ	SQP21	86	78	9.53	11.1	25.37/25.35	28.3/28.1	6.36×50.8
35V	35VQ	SQP3	1	73.2	9.53	11.1	31.75/31.70	35.36/34.10	7.94×38.1
352*V	352*VQ	SQP3*	86	86	9.53	11.1	34.90/34.87	38.6/38.3	7.94×54
45V	45VQ	SQP4	1	62	12.7	14.22	31.75/31.70	35.36/34.10	7.94×28.5
45**V	45**VQ	SQP4*	86	87.4	12.7	14.22	38.07/38.05	42.4/42.1	9.54×50.8

Splined Shafts

Model		Shaft Code	A	B	C	D	E	Spline Data (See below)
V	VQ							
20V	20VQ	151	41.1	9.53	11.1	3.9	27.8	A
25V	25VQ	11	44.5	9.53	11.1	3.9	27.8	A
2520V	2520VQ							
35V	35VQ	11	58.7	9.53	11.1	6.35	35.1	C
352*V	352*VQ							
45V	45VQ	11	61.9	12.7	14.3	9.7	39.6	C
45**V	45**VQ							

Spline Data Table (Involute splines from above chart)

Spline Data Reference	Number of Teeth	Pitch	Major Diameter	Form Diameter	Minor Diameter	Minor Diameter
A	13	16/32	22.17 22.15	19.03	18.63 18.35	Major dia.fit
C	14	12/24	31.7 31.67	27.2	26.99 26.64	Major dia. fit